Virtual Globes Museum 2.0 – Adding the Power of Community

Mátyás Gede, Zsuzsanna Ungvári, László Zentai

Department of Cartography and Geoinformatics, Eötvös Loránd University

Abstract. The Virtual Globes Museum web page was opened in 2007 with only five virtual globe models. Since then, the number of globes was raised over one hundred. The amount and heterogeneity of data made it necessary to rethink the underlying database structure. The new version of the web site introduces several new functions such as the possibility of adding multiple descriptions to globes in various languages and creating collections from a subset of globes. The most important improvement, however, is the crowd sourcing of the site: registered users can add or update descriptions and collections, which can fasten the growth of the database. Another novelty is the replacement of the old VRML plug-in used for displaying the globe models to a new WebGL or Flash-based visualization. This paper introduces the technical details of the new version and sketches the further plans of development.

Keywords: Virtual globes, Cartographic Heritage, Crowd sourcing, 3D models

1. Introduction

Globes are a special group of cartographic objects. Being three-dimensional models of our planet, they are very popular since the beginning of their history. Their nature of being spatial objects, however, also brings troubles: globes are much more vulnerable than flat maps and their digital preservation is more complicated. The Virtual Globes Museum (VGM) project aimed to present a cure to this problem. Cheap and quite simple methods were developed for globe digitizing and visualization, and were used in a unique website (http://vgm.elte.hu) offering realistic steerable-zoomable models of old globes to the public. This enables the visitors to observe such details of them that would be impossible in the museums where these objects are usually exhibited in display cases or beyond security barriers. (Márton ed. 2008, Gede 2009)

The trilingual (Hungarian, English, German) website offered a simple search engine, 3D visualization of globe models based on a VRML plug-in or a Java VRML player applet (*Figure 1*).

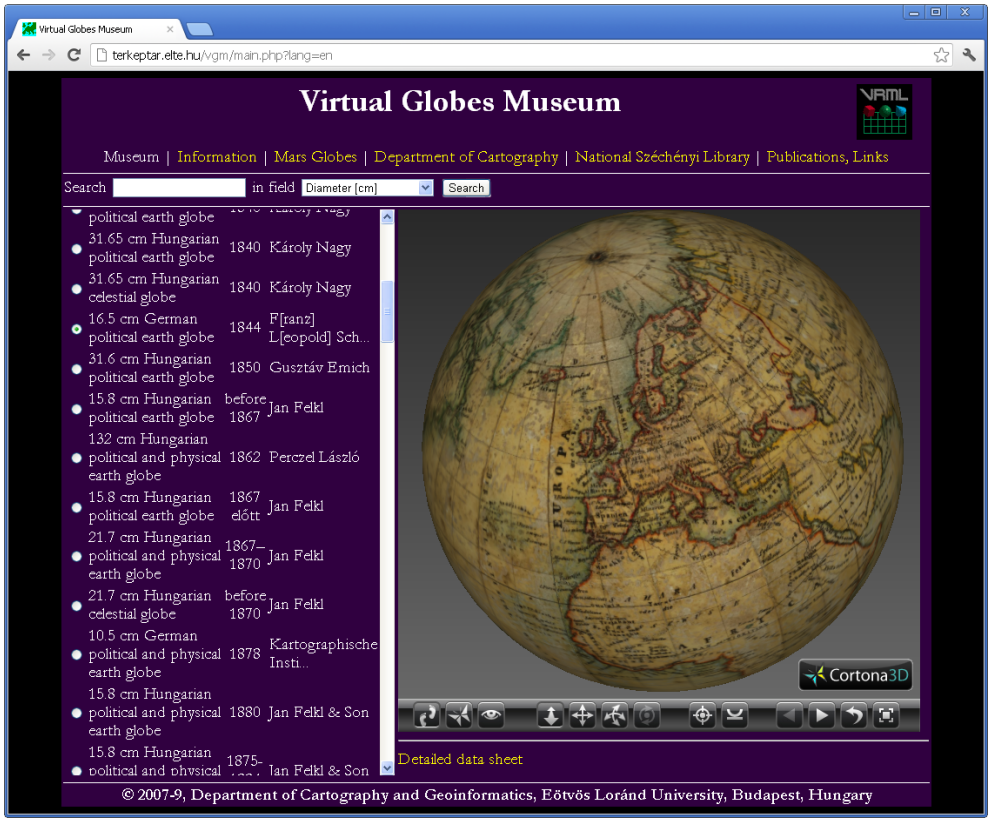

Figure 1. The old website of Virtual Globes Museum

The project and the VGM website became quite popular soon. A new elective course, Globe Digitizing, was offered at our university department, where students, after becoming familiar with the basic techniques, processed the given materials (scanned globe prints or photo sets) and created new virtual models. The content of the virtual exhibition grew to more than a hundred globes in a few years. Some of the virtual globes were also presented on a real globe exhibition: after observing the original globes in showcases, visitors of the exhibition were invited to computer kiosks, where they were able to examine such details of globes that were impossible to see on the originals: content on the back side, small details, etc. (Gede 2011)

With the growth of the collection new problems emerged. The English and German translations of globe descriptions were made slowly as the few people who had permission to the system did not have enough time to com-

plete them. Some attributes did not fit well in the database structure: globes with uncertain creation date, multiple authors, etc. It was hard to select a specific subset of globes if the selection was not based on the value of a database field (e.g. globes that were displayed together at a specific exhibition). More and more problems occurred with the VRML plug-ins, which made the website unstable.

To solve all these issues a brand new version was developed introducing several technical changes and new features.

2. The Background Database

The background database of the new website consists of several tables (*Figure 2*). The most important ones are:

- The **globes** table contains the globes' language-independent attributes such as diameter, date etc., and the URLs of the X3D model files and the KMZ superoverlays. Additionally, a thumbnail image is assigned to every globe. These thumbnails appear in search results and in collections where globes are referenced. This help users identifying globes.
- The **descriptions** table includes detailed globe descriptions. Each globe can have several descriptions in various languages (not only the currently available three languages of the user interface). Descriptions have a predefined field structure to ensure that all important data are included. These fields contain information about persons and companies related to the globe (authors, publishers), production technology, the frame/support structure, the original material used for compiling the virtual model, known occurrencies of the globe, its history, and a detailed description of the map content.
- The **collections** table stores "article-like" texts describing a subset of globes. The text can contain references to specific globes as hyperlinks. Collections are a great possibility to describe a group of globes that are somehow related to each other. Typical examples of collections are globes of a specific author; celestial globes in the museum etc. A well-composed collection is similar to an article in a magazine: it introduces the given globe group, gives background information about the time period or the authors, emphasizes the similarities and differences among those globes – facts that are interesting and important, but cannot be attached to one specific globe's description.

Additional tables store static image URLs (each globe can have several images: portraits, scanned images of the printed gores etc.), user management information and language codes.

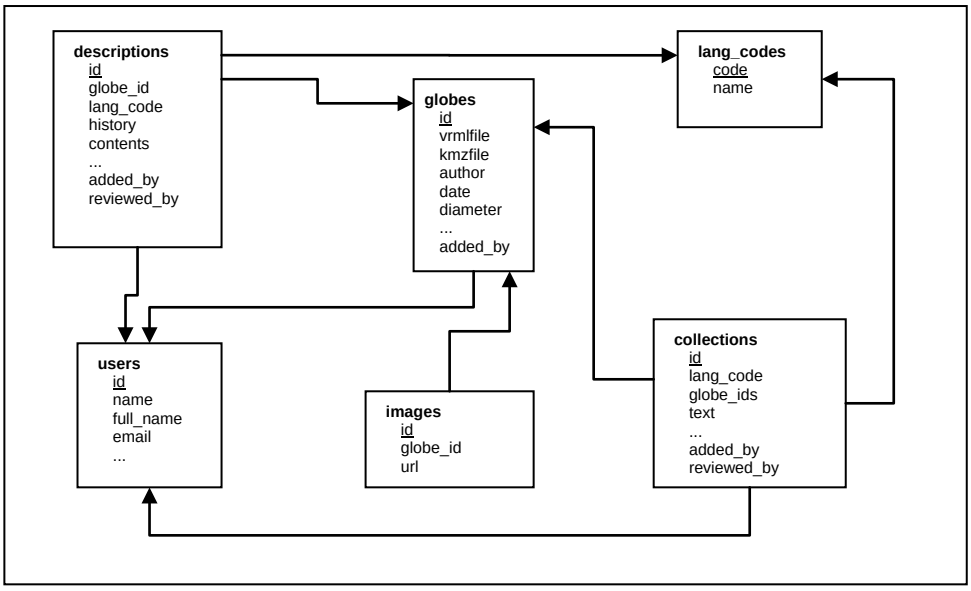

Figure 2. Structure of the background database

3. 3D Visualization Using X3DOM and Novelties in the User Interface

The old version of the globe museum visualized 3D globe models as VRML scenes, using a VRML browser plug-in or Java applet (depending on the user's choice). Although several VRML plug-ins exist, none of them seemed to work without any problems in every tested hardware+OS+browser combination.

Luckily, a new technology, X3DOM emerged in the last few years, developed by the Fraunhofer Institute, Germany. X3DOM is a JavaScript framework based on WebGL, enabling web-developers to include X3D codes in HTML files (Fraunhofer 2011). While the first release of the system (in 2010) was rather unstable and less supported by web-browsers, current versions are surprisingly good. In 2012, most of the current web-browsers support WebGL, and the X3DOM framework has a fallback mechanism using a Flash-based X3D viewer when it is necessary.

X3DOM not only facilitates the use of inline X3D codes in HTML, but the X3D elements become an organic part of the Document Object Model (DOM), which means that X3D nodes can be dynamically generated and manipulated by JavaScript, and even styled using CSS rules.

The 3D globe visualization in the new version of the VGM is based on this technology. This solution makes the service more widely accessible as visitors not able to install a plug-in (e.g. not having the appropriate rights on their computer) also can enjoy the 3D view. (Figure 3)

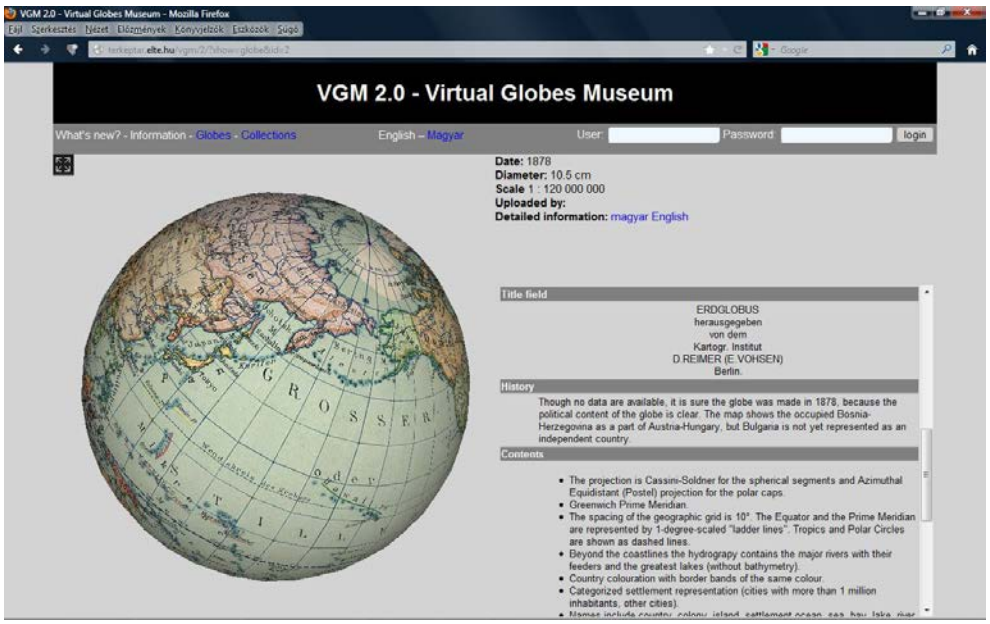

Figure 3: X3DOM in use on the VGM website

The graphic performance of different PCs can show big differences. As the authors did not want to exclude users with low-end graphic cards from viewing virtual globe models, textures are stored in three different resolutions. If a globe is not displayed correctly (usually due to insufficient amount of memory on the graphic card), one must simply switch to lower resolution. The smallest textures are rendered well even on 8-10 year-old computers.

Further to the new background structure, the user interface of the website also changed. A “What’s new” page greets the visitor first, where the latest uploaded globes, descriptions and collections are listed. Naturally, it is possible to browse the globes using their full list or specifying search filters and order criteria. After logging in, registered users can modify the content they have created or add new content.

4. Adding the Power of Community

The title *VGM 2.0* refers to the Web 2.0 phenomenon, as visitors of the new website are no longer restricted to only *view* but also to *add* content (Zentai, Guszlev 2006). Registered users can edit or add new globe descriptions and collections.

Naturally, new content is not published uncontrolled. First of all, user registration is not automatic but done upon e-mail requests. This is mainly to keep away robots and trolls from the site. Then, registered users can have different permissions. All new or modified content is subject of a reviewing process, and only materials reaching a certain quality are classified as "public". Non-public materials are visible only to their owners. The right of "giving publicity" is initially restricted to the developers of the site, but later any user can achieve this right after generating a certain amount of high-quality content.

In contrary to the previous version of the site, globe and collection pages have unique URLs, so not only the museum's website itself but any specific content can be referenced, shared in social network community sites etc. While users proudly present the latest content they added, at the same time they popularize the museum itself, making it more widely known and visited.

5. Conclusion

Although the new system is still in "beta" (open to the public, but in testing phase), the feedback is very positive. The introduced changes solved most of the problems of the old system. The changes of the technical background added even more possibilities to the future development, and made the use of the VGM website easier.

The application of Web 2.0 principles (Gartner 2009) brought a kind of cartographic communication to the site: it helps to collect further interesting information about the globes and share it with the public. Furthermore, thanks to the possibility of user-created collections, the museum can serve much better the priorities in cartographic education with special thematic collections such as an illustrated history of globes, or a collection following the changes of geographical names etc.

6. Further plans

Currently, new globes can be added only by the system administrators. The most important development plan is to add an online globe georeferencer. The georeferencer will be able to deal with uploaded gore scans and globe photographs, letting users create their own virtual globes. Naturally, a detailed user manual and photographing guide will supplement the new system, and quality checking will be even more important on user-created virtual globes than on descriptions or collections.

This work is already in progress. The georeferencer user interface will rely on the *OpenLayers* JavaScript framework (OpenLayers, 2012), while the projection transformation will use the *GDAL* library (GDAL, 2012).

Another plan is adding a "WYSIWYG" text editor to the collection-creating interface as currently text formatting can be done only by inserting HTML tags to the description text.

References

Fraunhofer (2011) X3DOM Documentation. Fraunhofer IGD, VCST. http://x3dom.org/docs/dev/. Accessed 29 September 2012

Gartner G (2009) Applying Web Mapping 2.0 to Cartographic Heritage. In: e-Perimetron, Vol 4., No. 4, pp. 234-239. http://www.e-perimetron.org. Accessed 05 November 2012

GDAL (2012) Geospatial Data Abstraction Library. http://www.gdal.org. Accessed 27 October 2012

Gede M (2009) Publishing Globes on the Internet. Acta Geodaetica and Geophysica Hungarica vol 44/1 pp. 141-148. doi:10.1556/AGeod.44.2009.1.14

Gede M (2011) Digital Support for Globe Exhibitions. Proceedings of the 6th International Workshop on Digital Approaches in Cartographic Heritage. The Hague, The Netherlands, 7-8 April 2011.

Márton M [ed] (2008) Virtual Globes Museum. http://vgm.elte.hu. Accessed 29 September 2012

OpenLayers (2012) OpenLayers Documentation. http://docs.openlayers.org. Accessed 28 October 2012

Zentai L, Guszlev A (2006) Web2 és térképészet. In: Geodézia és Kartográfia, Budapest, Vol 2006/11., pp. 16-23.