ICC 2013 Dresden

VIRTUAL GLOBES MUSEUM 2.0

ADDING THE POWER OF COMMUNITY

Department of Cartography
and Geoinformatics
Eötvös Loránd University

M Gede – Zs Ungvári – L Zentai

Outline

- Introduction
- Changes in visualization: from VRML to X3DOM
- New background database
- Novelties in the user interface
- Crowdsourcing
- Conclusions, further plans

Introduction

The old website

Introduction

The old website

Virtual Globes Museum

16.5 cm German political earth globe - 1 : 75 000 000

General description	
	Political globe with country boundaries, coloured continents with boundary bands.
Date	
	1844
Publisher	
	F[ranz] L[eopold] Schönninger bürgl. Buchbinder
Place of publication	
	Vienna, Austria
Author	
	Design and lithography: Fr[anz] von Elekes (Elekes Ferenc)
Technology	
	The globe was made by assembling 20° paper print segments on a support globe, manual colouring added later. The 18 pieces of globe segments – from pole to pole – are completed with 2 pieces of 10° polar caps. The virtual globe was compiled by georeferencing and assembling a large number of high resolution digital photographs of the copy kept in the Woldan Collection of the Austrian Academy of Sciences (with the kind permission of the director of the collection, Mag. Gerhard Holzer).
Support	
	The globe is fixed on an axis tilting 66.5° to the horizontal, placed in a copper meridian ring on a turned wooden stand. On the meridian ring there is a scale of 1° with every 10° written. One half of the ring shows the numbers growing from the Equator towards the poles, while on the half the numbers run from the poles towards the Equator from 0° to 90°.
Virtual instance's origin	
	A copy of the globe is kept in the library (Woldan Collection) of the Austrian Academy of Sciences and is registered as *ÖSTERREICHISCHE AKADEMIE DER WISSENSCHAFTEN SAMMLUNG WOLDAN GL-V(L)*; WE 300. [Woldan, Erick (1901–1989), a private collector in Vienna, who collected a most comprehensive Austrian library of geographical books and maps. The collection has about 20 000 volumes, prints and maps from 1500 to 1918.]

Introduction

- **The former Virtual Globes Museum website**
  - Since 2007
  - VRML plugin / Java VRML applet for 3D visualization
- **Problems**
  - English and German translations came slowly
  - Database structure not flexible
  - Compatibility issues of VRML plugins

-> Complex renewing of the website was needed

3D Visualization

- Former solution: VRML (using a plug-in or Java)
- New solution: X3DOM
  - X3D code embedded into HTML
  - Based on WebGL

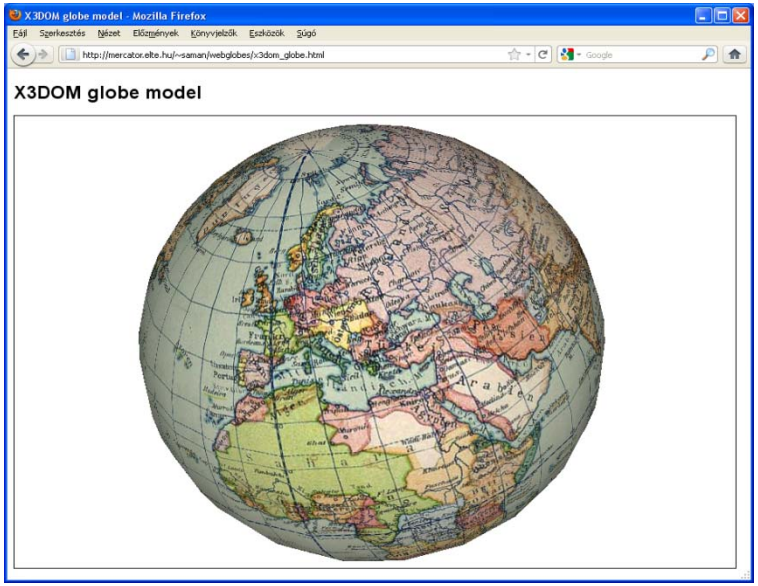


```
<!DOCTYPE HTML>
<html>
 <head>
  <title>X3DOM globe model</title>
  <link rel="stylesheet" type="text/css"
        href="http://www.x3dom.org/x3dom/release/x3dom.css">
  </link>
  <script type="text/javascript"
          src="http://www.x3dom.org/x3dom/release/x3dom.js">
  </script>
 </head>
 <body>
  <h1>X3DOM globe model</h1>
  <x3d width="900px" height="600px">
    <scene>
      <shape>
        <appearance>
          <imageTexture url="globe_2048.jpg"/>
        </appearance>
        <sphere/>
      </shape>
    </scene>
  </x3d>
 </body>
</html>
```

Background database

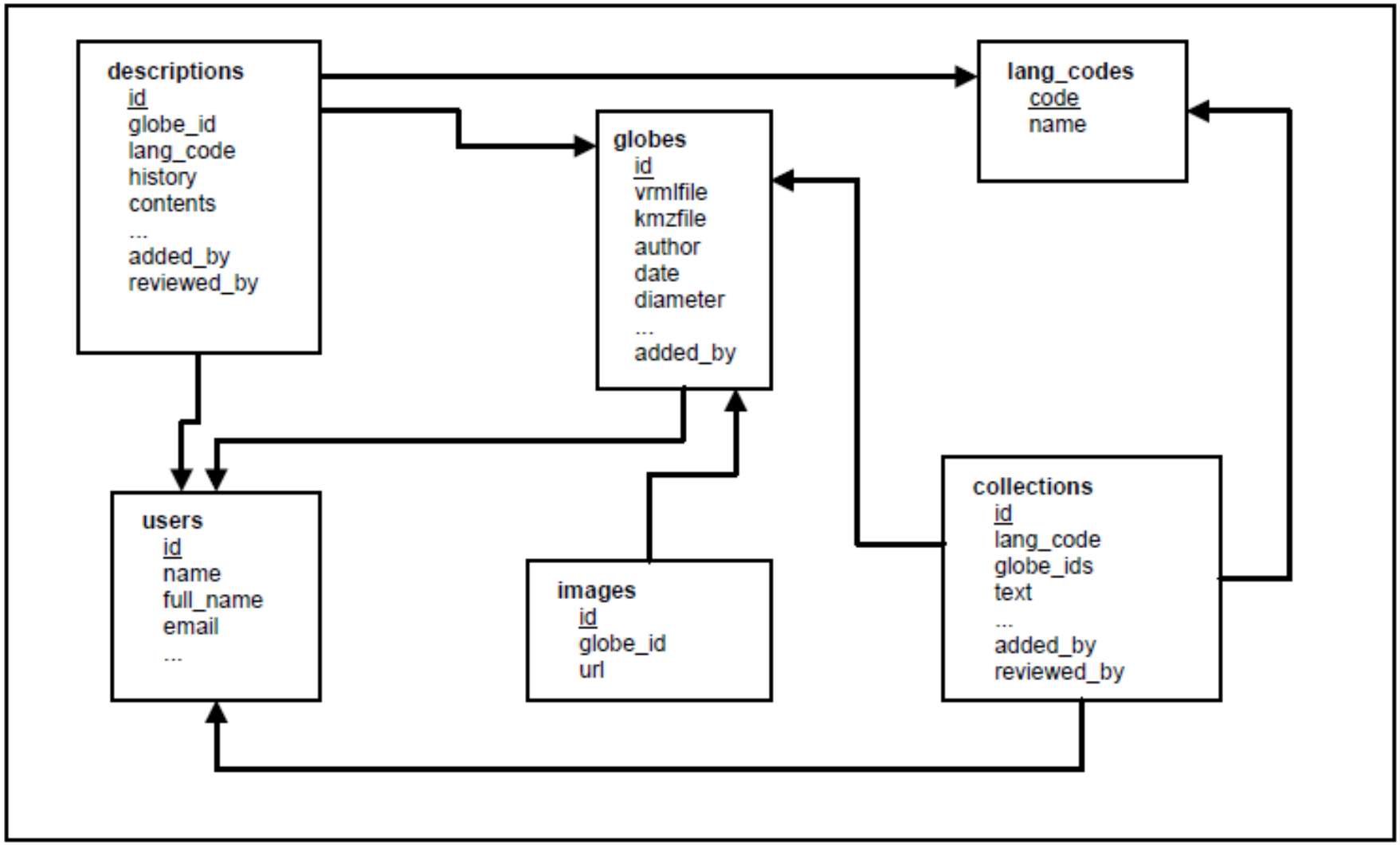

New user interface

- Globes
- Descriptions – each globe can have several descriptions
- Collections – descriptive text for a subset of globes
- Users with various rights can create or modify objects
- All pages have direct URL (object pages are easily linkable)
- Thumbnails for all globes

New user interface

Information page

VGM 2.0 - Virtual Globes Museum

What's new? - Information - Globes - Collections - Interactive gazetteer English – Magyar User: Password: login

This virtual exhibition is intended to present the earth and celestial globes made in or related to Hungary.

The site uses WebGL with the X3DOM framework to view the virtual globes. If your browser fails to display the 3D models, it is advisable to upgrade to a newer browser version.

Installing Google Earth is also recommended to reach all functions of the museum.

Usage:

Clicking the "Globes" menu will show you the list of the currently available globes with their primary properties. Selecting an item from the list will load the globe's 3D model.

The list can be shortened by defining searching criteria. The results will include all the records in which the specified data field contains the word fragment typed into the "Search" textbox.

Detailed information of the globes can be present in different languages. Please click on the language you prefer at section "Detailed information". Detailed data sheets also include a link to a Google Earth file of the globe.

Virtual Globes Museum

Founder editor
MÁRTON Mátyás
Web page created and maintained by
GEDE Mátyás, UNGVÁRI Zsuzsanna
Contributors
BAGAMÉRI Gergely, BAKONYI Judit, GERCSÁK Gábor, HOFHAUSER Anna, KIS Réka, KONCZ-LÁSZLÓ Géza, KŐVÁRI Dezső, MADARÁSZ Zsófia, NEMES Zoltán, NYULI Éva, PAKSI Judit, Hannes RÖTHER, Monica Macedo SANTOS, SIKOS Károly Álmos, SZABÓ Renáta, SZABÓ Tímea, SZABÓ Tímea, SZEKERKA József, TOKAI Tibor, TÓTH Bettina, UNGVÁRI Zsuzsanna, VÁGÓ Erika, VALÓ Adrienn, VEREBINÉ FEHÉR Katalin, VÖRÖS Kinga Cecília, ZUBÁN Diána, ZSIGA Aranka

© 2007-2013, Department of Cartography and Geoinformatics, Eötvös Loránd University, Budapest

New user interface

„What's new?" page

VGM 2.0 - Virtual Globes Museum

What's new? - Information - Globes - Collections - Interactive gazetteer English – Magyar User: Password: login

Recently added globes:

	Date	Diameter	Body	Publisher
	1700	10.5 cm	Earth	Scherer
	1987	33 cm	Earth	VEB Räthgloben-Verlag
	2012	13 cm	Io	ELTE TEGETA
	1878	10.5 cm	Earth	D[ietrich] Reimer (E[rnst] Vohsen) Kartographische Institut
	2012	132 cm	Earth	ELTE Térképtudományi és Geoinformatikai Tanszék

Recently added descriptions:

Globe	Language
10.5 cm latin politikai földgömb (1700) - (Scherer)	magyar
33 cm magyar politikai földgömb (1987) - (VEB Räthgloben-Verlag)	magyar
13 cm Latin globe of Io (2012) - (ELTE TEGETA)	English
10.5 cm német politikai-domborzati földgömb (1878) - (D[ietrich] Reimer (E[rnst] Vohsen) Kartographische Institut)	magyar
10.5 cm German political and physical earth globe (1878) - (D[ietrich] Reimer (E[rnst] Vohsen) Kartographische Institut)	English

Recently added collections:

Celestial and Planetary Globes of the VGM (English, Gede Mátyás)

Tektonikai glóbusz (magyar, Ungvári Zsuzsanna)

Kiepert glóbuszai - 2 in 1 (magyar, Ungvári Zsuzsanna)

Blaeu gömbök (magyar, Gede Mátyás)

New user interface

Globe with description

VGM 2.0 - Virtual Globes Museum

What's new? - Information - Globes - Collections - Interactive gazetteer English – Magyar User: Password: login

Date: 1878
Diameter: 10.5 cm
Scale 1 : 120 000 000
Uploaded by:
Detailed information: magyar English

10.5 cm German political and physical earth globe - 1 : 120 000 000

General description
Physical-political globe. The virtual globe is based on unmounted gore set.

Date
1878

Publisher
Kartographische Institut, Berlin

Place of publication
Berlin, Germany

Author
D. Reimer (E. Vohsen)

Technology
The globe was probably made by mounting the paper prints of the spherical segments
the north and south – are completed by 2 polar caps of 20°. The material of the suppor
were ever mounted on a globe. The virtual globe was prepared by the high resolution sc
globe and then by georeferencing of the polar caps.

Support
unknown

Virtual instance's origin
Map print of an unknown (not indicated) edition of the globe.
Maproom of the Department of Cartography and Geoinformatics. Eötvös Loránd Univers

New user interface

Collection page

VGM 2.0 - Virtual Globes Museum

What's new? - Information - Globes - Collections - Interactive gazetteer English – Magyar User: Password: login

Celestial and Planetary Globes of the VGM

Although the majority of globes show the surface of the Earth, there are numerous items depicting the sky above us or other celestial objects. The following list introduces these spheres of the Virtual Globes Museum.

Celestial Globes

Celestial (or sky) globes show the stars of the sky and the constellations they form. These spheres use celestial coordinates in geocentric equatorial system (declination; right ascension).
Some of these globes served mostly as ornaments, therefore the constellations were beautiful, detailed paintings.

These two globes were made by the famous Dutch cartographer Willem Janszon Blaeu in the beginning of the 17th Century.

Three sky globes of Coronelli in different sizes were made using photographed prints of a facsimile atlas. Unfortunately some parts of the bigger globes are missing.

The oldest "modern" celestial globe of the museum (placing emphasis to the position of stars, not the artistic visualization of constellations) is the work of the Hungarian geographer Károly Nagy, created in 1840.

New user interface

Edit collection

Crowdsourcing

- The new structure of the site enables users with appropriate rights to create or edit globe description sheets and/or collection pages
- Hopefully this feature will help us to increase the number of items in the museum faster.

Conclusions

- Use of new web 2.0 technologies
- Easier and more flexible user interface
- User-created collections: a tool for cartographic education

Further plans

- Online globe georeferencer
- Crowdsourcing
- Using OpenLayers and GDAL
- Detailed user manual
- Quality checking

Thank you for your attention